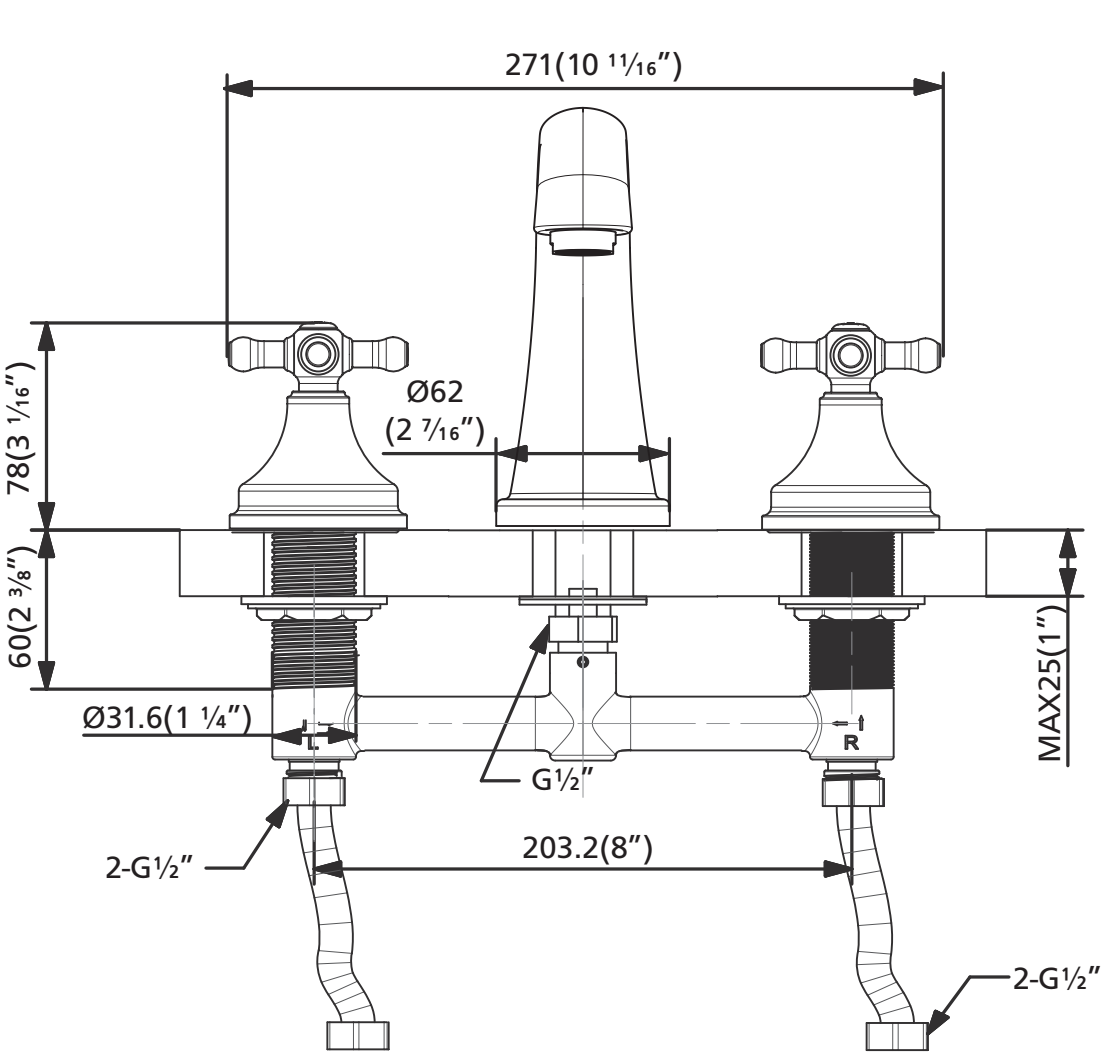
271(10 11/16")
78(3 1/16")
60(2 3/8")
Ø62
(2 7/16")
Ø31.6(1 1/4")
L
R
G1/2"
MAX25(1")
2-G1/2"
203.2(8")
2-G1/2"

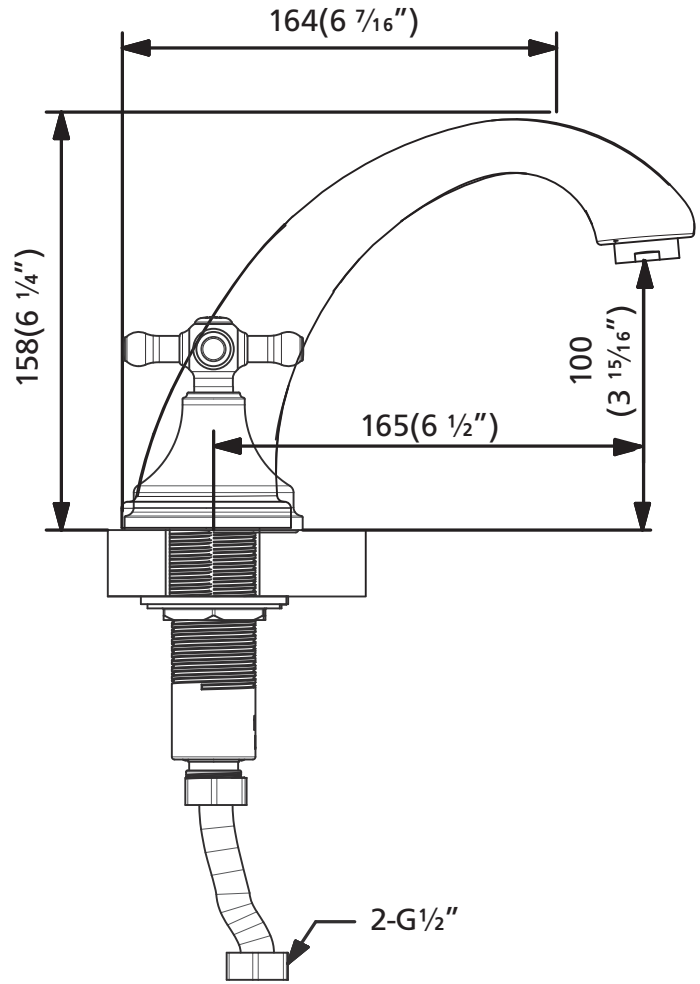
164(6 7/16")
158(6 1/4")
100
(3 15/16")
165(6 1/2")
2-G1/2"