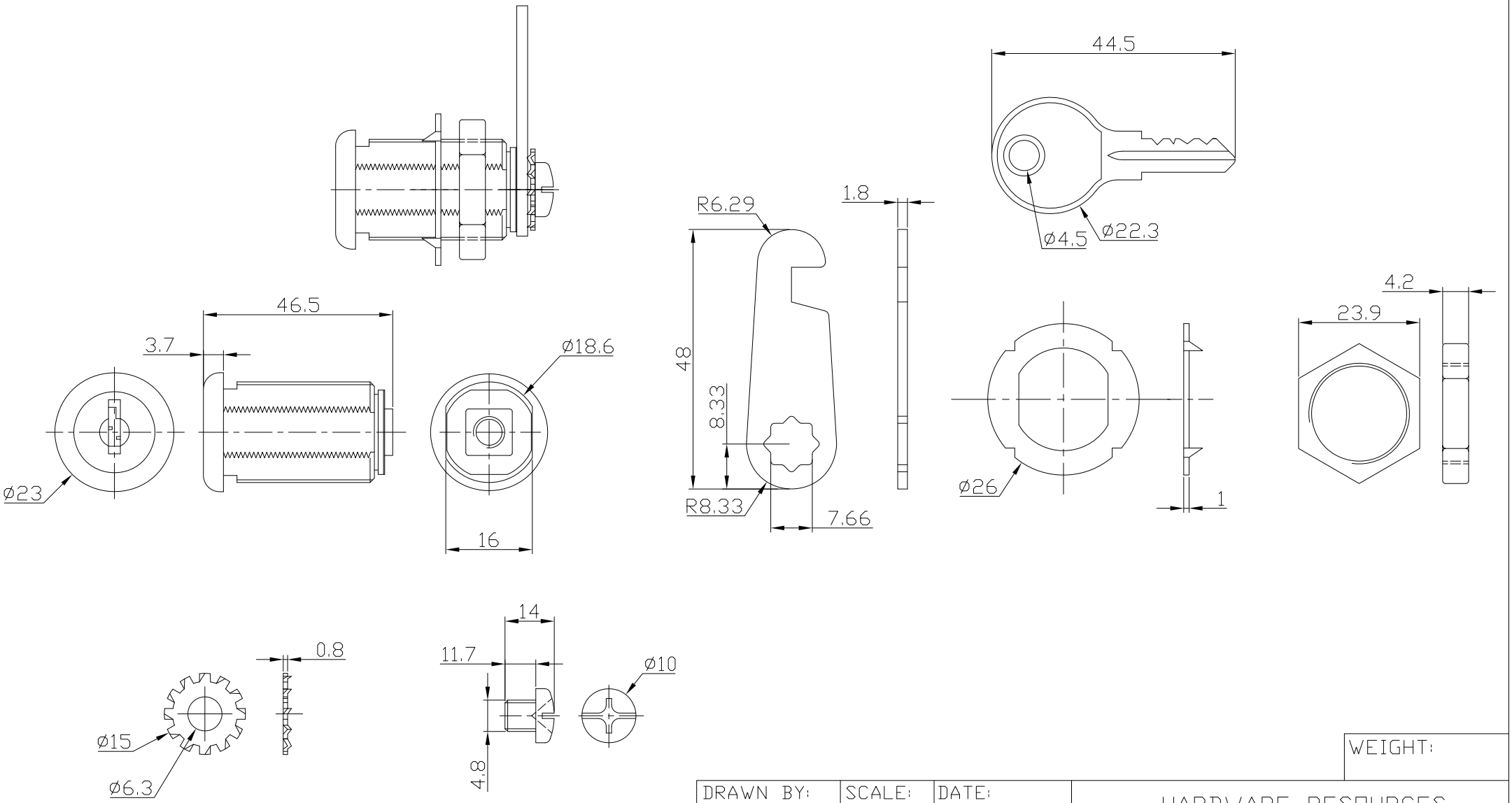

Keyed Allike
Keyed Different

DRAWN BY: Peter Wen	SCALE: 1/1	DATE: 14/9/29	WEIGHT:

Description:
1-1/2" Length Cam Lock
w/In. box 200pcs/Ctn
16.5kg/Ctn

HARDWARE RESOURCES
4319 MARLENA ST, BOSSIER CITY, LA 71111

MATERIAL:

PART NAME:

ITEM NO: 78739

PLATING: