SS44-R

DELTANA

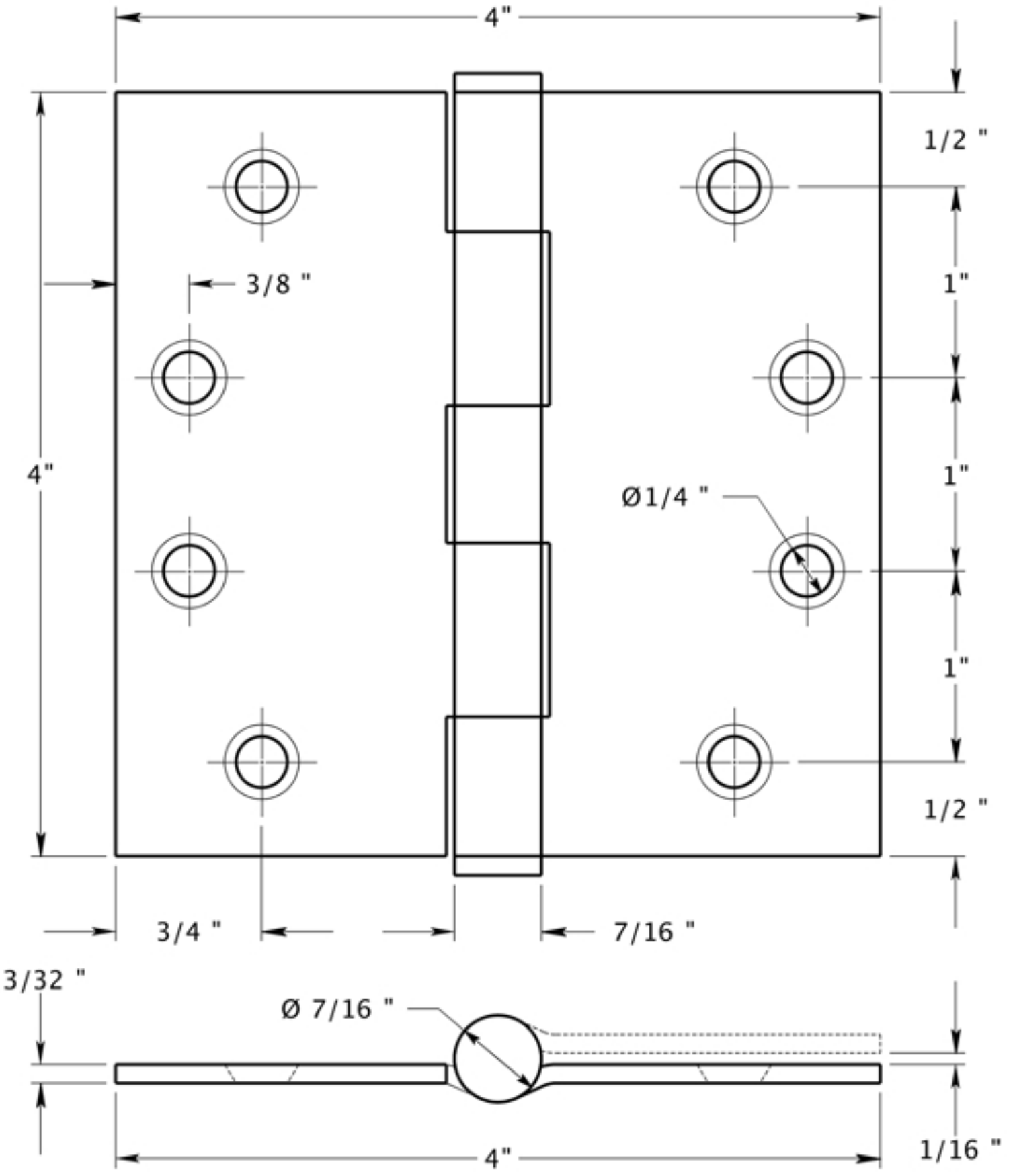

SS44B-R
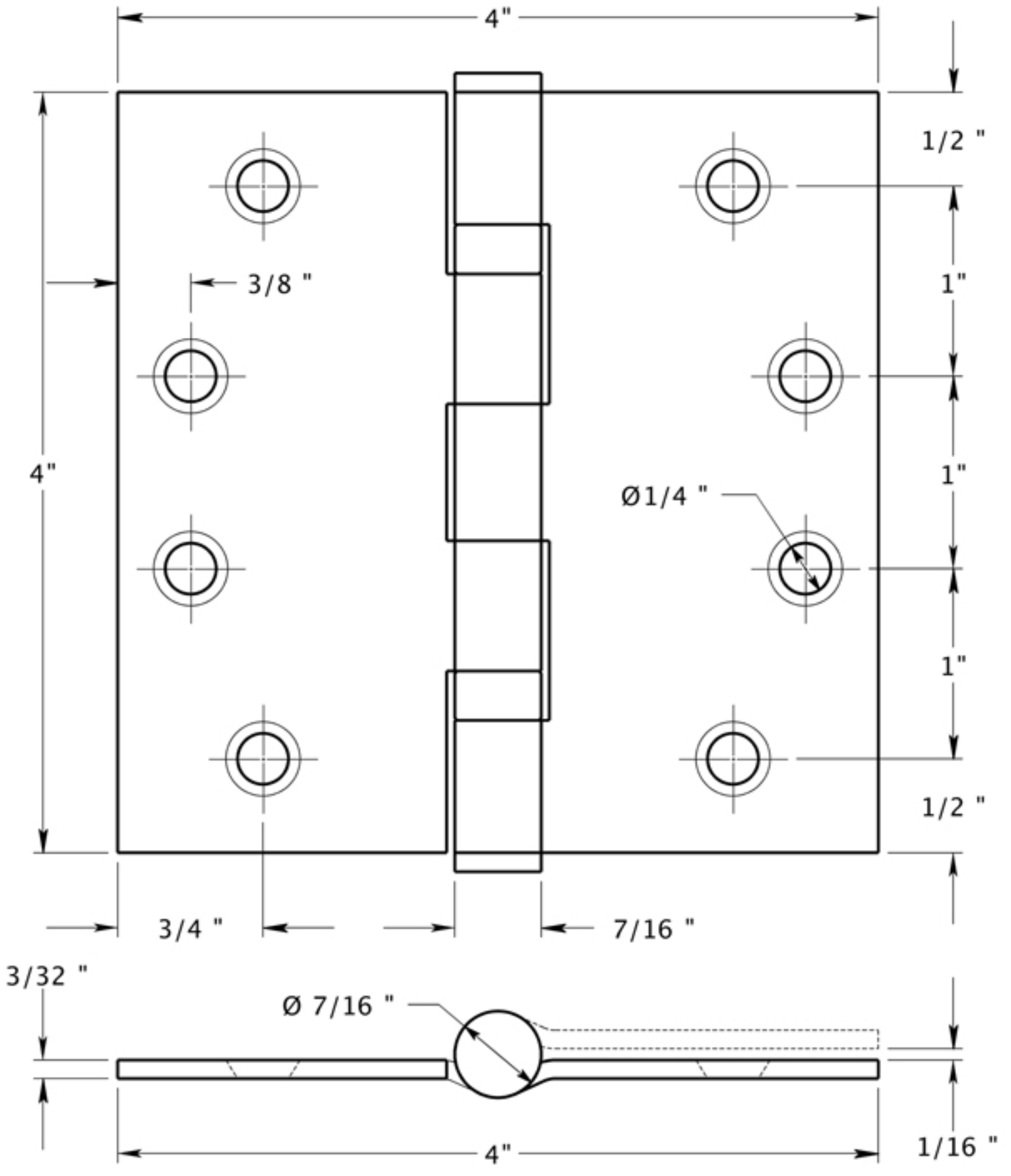
DELTANA