BETTER HOME PRODUCTS

STINSON NEACH ROMAN TUB FAUCET WITH VALVE SET SPECIFICATIONS

FEATURES:

* All metal construction. Ceramic disc valves.
* 3 Hole installation. Valve kit included.
* Designed to be installed on decks up to 2 1/2” thick.
* Accepts 1/2” (5/8” OD) Copper sweat connections.
* 13 gpm (49L / min) flow rate @ 45 psi.
* Test plug included.

WARRANTY:

* Limited lifetime mechanical function warranty against leaks and drips to the original residential homeowner/user.
* 10 year mechanical function warranty against leaks and drips when used in a multifamily installation.
* 5 year mechanical function warranty against leaks and drips when used in a commercial installation.
* 5 year finish warranty on all installation types, on all finishes.

ITEM NUMBERS:

F93004SB - Satin Brass Finish
F93011DB - Dark Bronze Finish
F93015SN - Satin Nickel Finish
F93044BLK - Matte Black Finish
F93088CH - Chrome Finish

STANDARDS:

IAPMO Certified
ASME A112.18.1 / CSA B125. 1
EPA WaterSense
ADA for Lever Handles

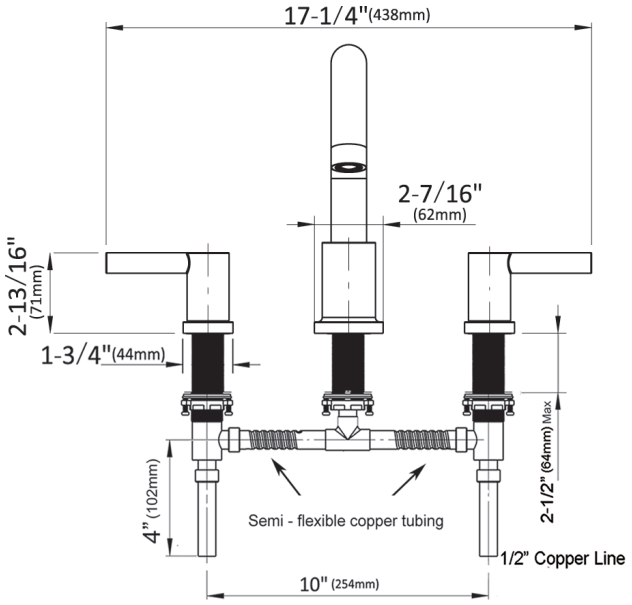

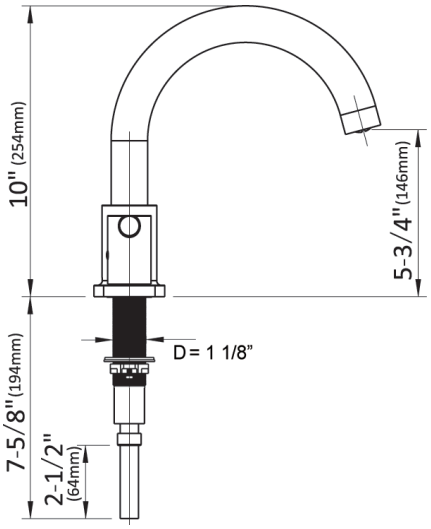

CRITICAL DIMENSIONS